DELTA Electronics

DELTANET – Network management system

- Remote access and control of nodes and amplifiers
- Quick localization of ingress problems
- Monitoring- and configuration management

DELTANET – MAKE YOUR NETWORK VISIBLE

Cable-TV Networks managed by DELTANET

EDITION 2

DELTANET INTELLIGENT MONITORING SOFTWARE SOLUTION

DELTANET NMS software for monitoring and troubleshooting your FTTx and cable networks

Powerful non-proprietary monitoring software to manage your network

- Module-oriented NMS-solution for: HFC, fibre optics, **FOSTRA-F**, **FOSTRA-D**, head end devices, provisioning
- Graphical user interface for display of all parameters of your network and the network topology
- Automatic analysis feature for ingress fighting and error analysis in collaboration with our managed components
- A highly powerful analysis tool lets you quickly locate sources of interference on the network by evaluation of important parameters of the CMTS and the cable modem in conjunction with managed components.
- Supported standards and protocols: SNMP, SOAP, HTTP, Telnet, XML, XSLT and Java
- Integration and capture of your managed components in the **DELTANET** is possible with intelligent Smart Phone Application (**FOSTRA-F**) in conjunction with a database system – this saves the installer considerable time during commissioning while visualization is made within a few minutes
- Take advantage of our sophisticated service and software maintenance system
- **DELTANET** is suitable for **FOSTRA-F**, **FOSTRA-D** – but also for the integration of multi-vendor components
- **FOSTRA-F** = FSK-Monitoring **FOSTRA-D** = DOCSIS-Monitoring

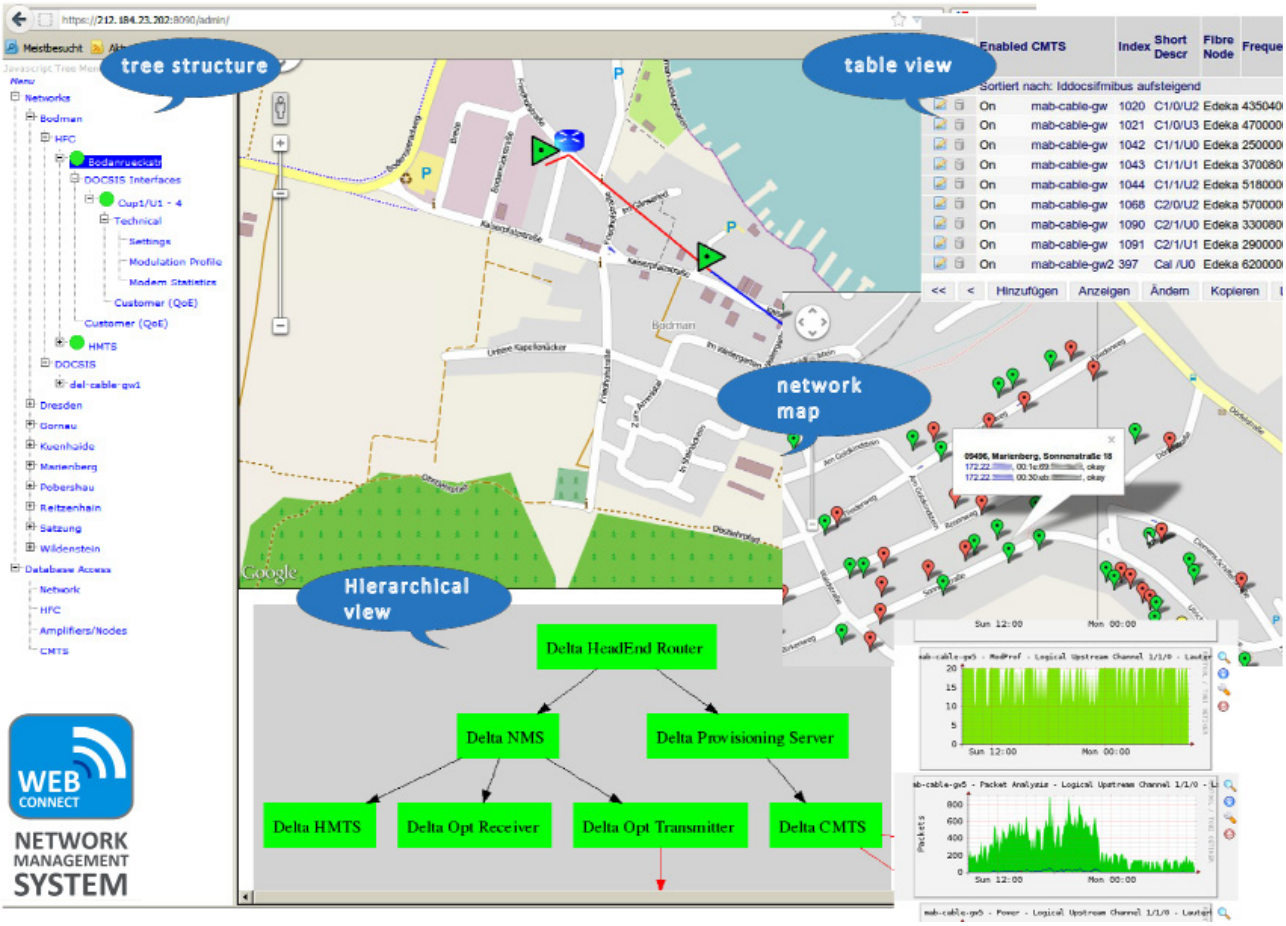

DELTANET NMS software for monitoring and troubleshooting your FTTx and cable networks

Powerful non-proprietary monitoring software to manage your network

- A smartphone or tablet PC connection via our app provides an automated collection of your device locations
- With the App, a system check in relation with the head-end controller and DELTANET is possible in field
- Systematic recording of location data and documentation of the settings parameters of your network components
- Access to DELTANET via internet connection
- Device control by Android App: DELTA amplifier and DELTA nodes

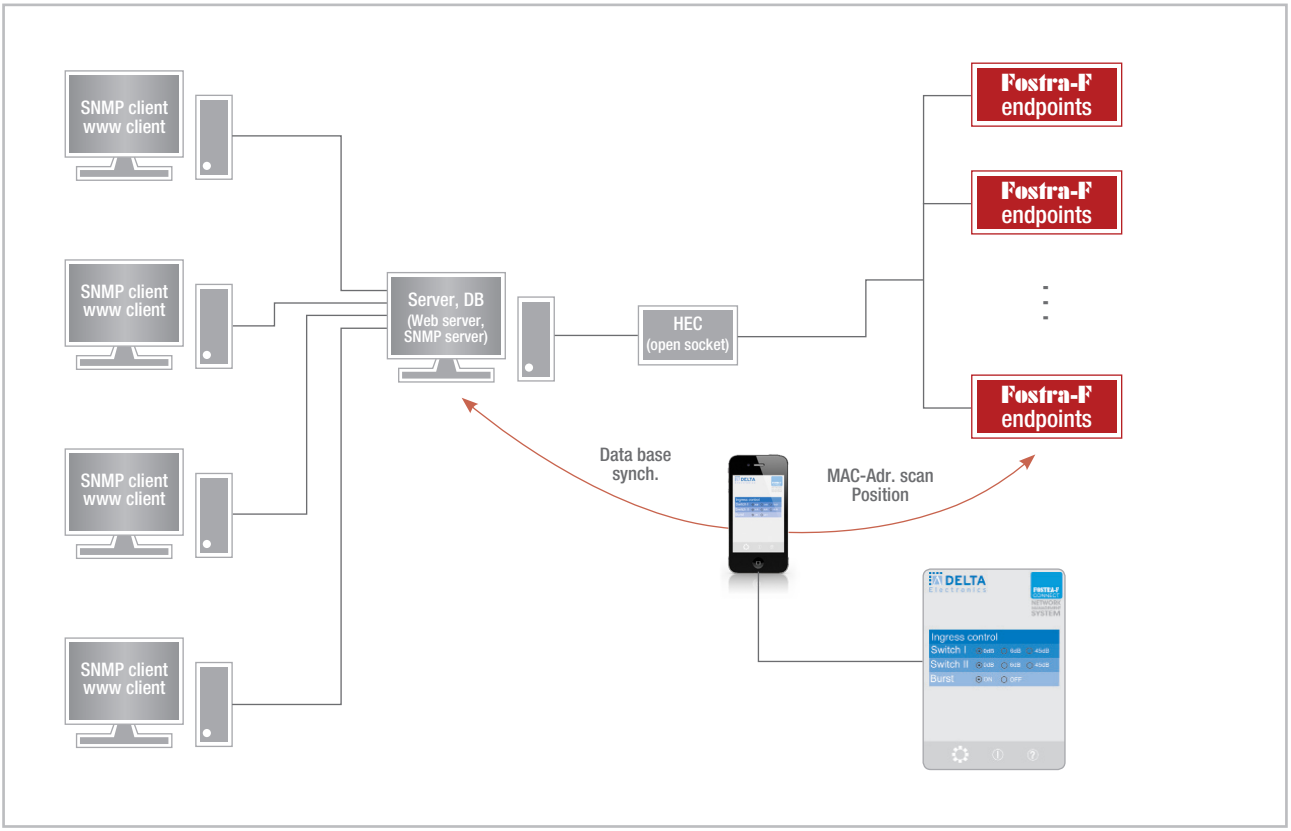

FOSTRA-F NETWORKMONITORING

FOSTRA-F Microreceiver for Fibre Nodes and Amplifiers
Cost-effective monitoring system for RFoG nodes and amplifiers to manage your network

- FSK Microreceiver in operation with HEC 1004 and DELTANET NMS-Software acc. EN 60728-14
- Plug-able module for: ONH, ONB, BKD, LHD, NVD types (latest product generation)
- RX frequency 868,3 MHz
- Monitoring status LED for displaying operation mode
- Monitoring functions: DS ON/OFF, Burst Mode ON/OFF, Ingress Detection Switch 0 / 6 / 45 dB
- Intelligent integration into DELTANET via Smart Phone application
- Very low power consumption and cost-effective solution for monitoring your network

Type		FOSTRA-F
Application		ONH, ONB, BKD, LHD, NVD Typen (latest product generation)
Article-No.		5700 1981
RX frequency	MHz	868,3 MHz (others on request)
Monitoring-Status LED		green: 0 / 6 / 45dB, DS ON/OFF, Burst Mode ON/OFF
Bandwidth	kHz	200
Spurious	dBµV	<10
Dynamic-Input level	dBµV	30...75
Data Speed	Bps	9600
Local Interface		RS-232
Power supply	V~/W	6-24V / < 0,4W@24V / <0,18W@12V
Dimensions	mm	25 x 24 x 8
Weight	kg	0,02

FOSTRA-F NETWORK MONITORING

Headend Controller for FOSTRA-F
Cost-effective monitoring system for RFoG nodes and amplifiers to manage your network

- Head End Controller in operation with **FOSTRA-F** and **DELTANET** NMS-Software acc. EN 60728-14--
- Compact FSK-transmitter 19“, 1RU standard housing
- Transmit frequency 868,3 MHz
- Web server with **DELTANET** application, Linux operated
- 4 outputs with RF testpoint, optimal cluster splitting possible
- Electronic level adjustment of each output
- 10Base-T RJ-45 connection, USB-port

Type		HEC-1004
Application		**DELTANET / FOSTRA-F**
Article-No.		5700 2115
TX-frequency	MHz	868,3 MHz (other on request)
Monitoring-Status LED		green
Bandwidth	kHz	200
Spurious	dBµV	<10
Distortion	dB	>66
Transmitting level	dBµV	4 x 75...105 (adjustable by software)
RF test point		4x-20dB
Data Speed	Bps	9600
Local Interface		10 Base-T RJ-45 and USB
Power supply	V~/W	185...265 / < 10
Dimension	mm	19“, 1 RU 482 x 260 x 44 / IP 20, In-door
Weight	kg	2,0

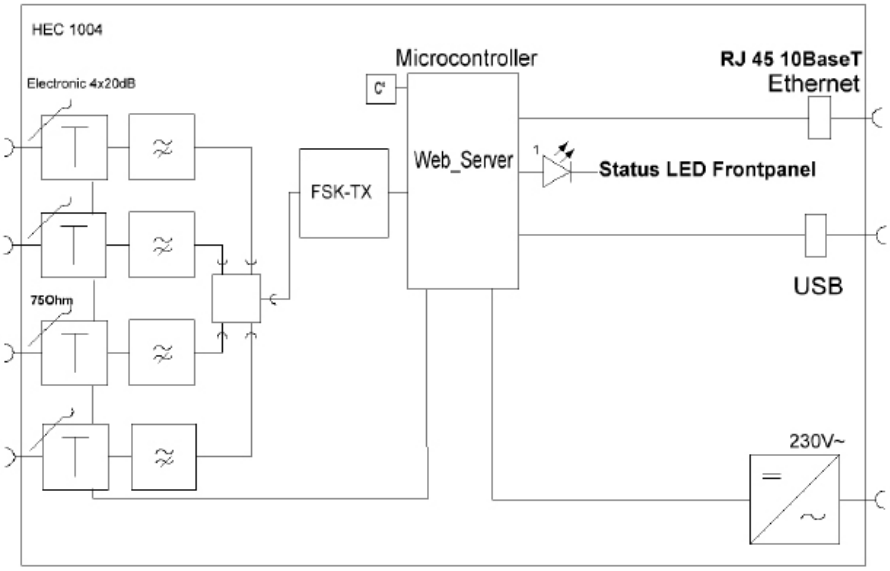

RFoG MICRO NODE - PLUS

Smart Fiber Node for FTTX/PON- Architectures
Particularly suitable for bidirectional operation in connection with DOCSIS-PON/RF over Glass (RFoG).

- Burst Mode Operation acc. IEC 60728-14 or CW-Operation
- Prepared for **FOSTRA-F** network monitoring system
- Optical AGC function based on optical input power
- Constant RF output level at wide optical input power range
- Interstage attenuator and slope - step spin control
- Display of optical power with LED indicator
- New: CWDM burst mode on request
- Low noise DFB laser in Burst- or CW-Mode Operation
- Internal WDM-filter 1550/1610nm for RfoG application
- With **FOSTRA-F**: DS ON/OFF, Burst Mode ON/OFF, IDS 0/6/45 dB

Type	ONH 1000	ONH 1161 BF	ONH 1161 B1F
Article-No.	5700 1708	5700 2112	5700 1957
Description	Optical Micro-Receiver, 1290...1620nm, 40-1006 MHz, 92 dBµV RF-output level (without **FOSTRA**)	Optical Micro-Node, 1550nm/1610nm, 15-65/85-1006 MHz, 92 dBµV RF-output level	Optical Micro-Node, 1550nm/1610nm, 15-65/85-1006 MHz, 99 dBµV RF-output level

ONH 11xx BF

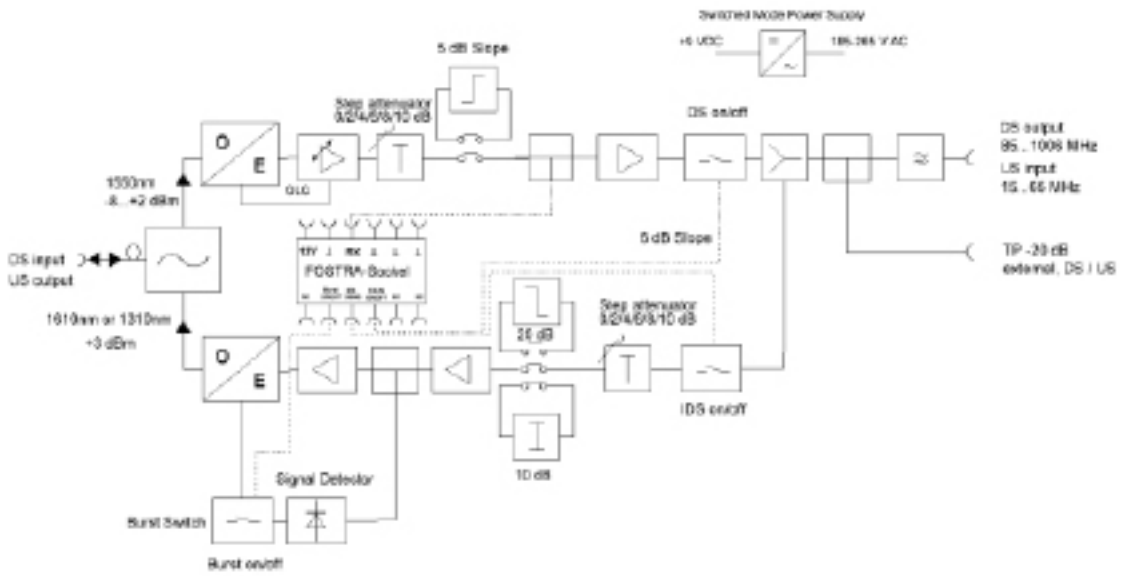

Type			ONH 1161 BF	ONH 1161 B1F
Applications			HFC, FTTH, FTTB, DOCSIS-PON/RFoG	
Compact die-cast housing			188 x 85 x 50 / IP 20, In-door	
Weight		kg	0,8	
Fiber connectors			SC/APC	
RF connectors			F-female	
Mains feeding		V~/W	185...265 / < 8	
Operation temperature		°C	-20…+55	
Adjustment elements			Step Spin Attenuator and Jumper	
Internal WDM (Tx / Rx)		nm	1550 / 1610 (Tx. 1310 or 1590nm on request)	
Downstream	Optical wavelength	nm	1550 ± 10	
	Optical input power	dBm	-8…+2, max. +2 dBm optical input power	
	Frequency range	MHz	15-65/85…1006	
	Frequency response	dB	± 0,7	
	Optical level control (OLC)	dBm	-7…+1 (RF-output level ± 1 dB)	
	RF output level	dBµV	92 ± 1 @ -7…+1 dBm, OMI = 4 %, CTB,CSO > 60 dBc	99 ± 1 @ -7…+1 dBm, OMI = 4 %, CTB,CSO > 60 dBc
	C/N		51 dBc @ -3 dBm, OMI 4%	
	RF level attenuator	dB	0 / 2 / 4 / 6 / 8 / 10 (Step Spin Attenuator)	
	RF slope	dB	0 / 5 (Switchable by jumper)	
	Test point RF output	dB	-20 (F-female, external, bidirectional)	
	Monitoring optical input	dBm	Green LED on: input > -8	
	Test point optical input		1 (Inside housing)	
Upstream	DFB Laser / optical power	nm/dBm	1610 / +3 (With isolator)	
	Laser operation		Burst Mode Operation (acc. IEC 60728-14) or CW-Mode Operation	
	RF input dynamic range	dBµV	70…110 (“Laser ON”@ Min. input RF-Level 70 dBµV, 0dB attn.)	
	Frequency range	MHz	15…65	
	RF input level	dBµV	OMI 15% @ 80 (Attn. = 4 dB)	
	RF input level attenuator	dB	0 / 2 / 4 / 6 / 8 / 10 (Step Attenuator 2 dB steps), 0 / 10 / 20 dB Jumper Att.	
	Ingress Detection Switch	dB	IDS 0 / 6 / 45	
	Monitoring optical output		Green LED on: Laser „ON“	

MINI FIBRE NODE

Smart Fiber Node for FTTX/PON- Architectures
Particularly suitable for bidirectional operation in connection with DOCSIS-PON/RF over Glass (RFoG).

- Burst Mode Operation acc. IEC 60728-14 or CW-Operation
- Prepared for **FOSTRA-F** network monitoring system
- Modular return way for high flexibility of 1 or 2 fibre solution
- High RF output level and dynamic range
- Optical AGC function based on optical input power
- Low noise DFB-laser in burst or CW mode operation
- Interstage attenuator and slope - step spin control
- Display of optical power through LED indicator
- Return way via diplexer-module selectable
- With **FOSTRA-F**: DS ON/OFF, Burst Mode ON/OFF, IDS 0/6/45dB

Type	ONB 1000	ONB 1131 BF	ONB 11xx	ONB 1161 BF
Article-No.	5700 1958	5700 1963	5700 xxxx	5700 1599
Description	Optical Mini receiver 5…1006 MHz	Optical Mini Node, Burst Mode DFB Laser 1310nm, +3 dBm, Internal WDM 1550 / 1310 nm	Optical Mini Node, DFB Laser CWDM xx nm, +3 dBm 2x SC/APC	Optical Mini Node, Burst Mode DFB Laser 1610nm, +3 dBm, WDM 1550/1610nm

ONB 11xx BF

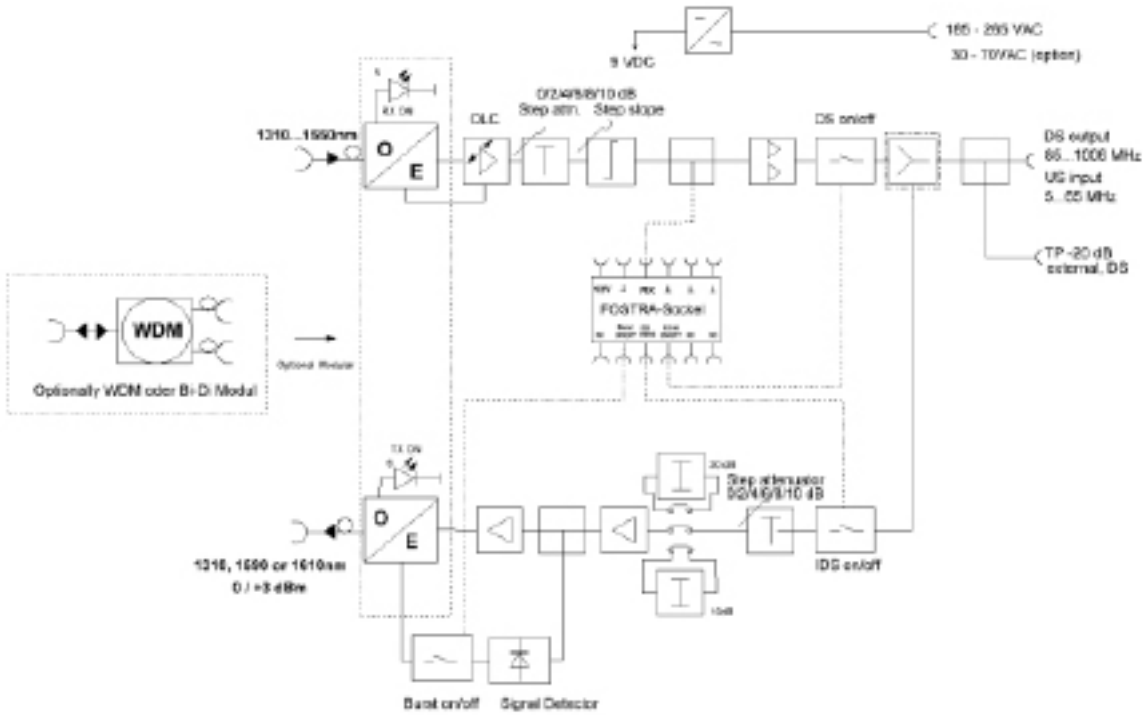

Type			ONB 11xx BF
Applications			HFC, FTTB, FTTC, DOCSIS-PON/RfoG
Compact die-cast housing		mm	210 x 123 x 70 / IP 50, In-door
Weight		kg	1,3
Fiber connectors			SC/APC, 2 Pcs (without internal WDM), 1 Pc (with internal WDM)
RF connectors			F-female
Mains feeding		V~/W	185…265 / 13,5
Operation temperature		°C	-20…+55
Adjustment elements			Step Spin 2 dB steps for level and slope control
Internal WDM			1550/1310 or 1550/1610nm (CWDM on request)
Downstream	Optical wavelength	nm	1260 …1620
	Optical input power	dBm	-8…+2
	Optical level control	dBm	-7…+1 (RF-output level ± 1 dB)
	Frequency range	MHz	15...65/85…1006 (Diplexer 565)
	Frequency response	dB	± 0,7
	RF output level	dBµV	106 @ -7...+1 dBm, OMI = 4% (CTB,CSO > 60 dBc, 41Ch. PAL, 54 Ch.QAM, Flat)
	C/N		51 @ -3 dBm, OMI 4%
	RF slope	dB	0 / 2 / 4 / 6 / 8 / 10 Step Spin
	RF level attenuators	dB	0 / 2 / 4 / 6 / 8 / 10 Step Spin
	Monitoring optical input	dBm	Green LED on: input > -10
	Test point optical input		1 (Inside enclosure)
	DFB Laser / optical power	dBm	+3 (1310, 1590, 1610 nm, other on request)
Upstream	Laser operation		Burst Mode Operation (acc. IEC 60728-14) or CW-Mode Operation
	RF input dynamic range	dBµV	70 … 100 („Laser ON“ @ 70 dBµV, 0dB attn.)
	Frequency range	MHz	15…65 (Diplexer RLK 565)
	RF input level	dBµV	OMI 15% @ 80 (Att. = 4 dB)
	RF input level attenuator	dB	0 / 2 / 4 / 6 / 8 / 10 Step Spin, 0 / 10 / 20 Jumper Attn.
	Monitoring optical output		Green LED on: Laser „ON“
	Ingress Detection Switch	dB	IDS 0 / 6 / 45

LINE EXTENDER-/ DISTRIBUTION-AMPLIFIER LHD

- Prepared for network management system
- 1 GHz Bandwidth, modulare return way by diplexer
- Interrupt free electronic adjustment, get it operable without additional accessories
- 7-Segment display, simply to adjust by keypad
- Extended up stream bandwidth to 105 MHz to configure by diplexer
- AGC module available
- With **FOSTRA-F**: IDS 0 / 6 / 45 dB switchable at the return
- 2 outputs, IN/OUT connectors in vertical or horizontal position
- Compact alu-die cast housing acc. IP 65, strand mountable

NEW

- **FOSTRA-F** FSK-RX

Type			LHD 41	LHD 41 R
Article-No.			5700 1626 (local powered)	5700 1627 (remote powered)
Downstream	Frequency range	MHz	5-1006 (returnway amplifier 105 MHz fix on board, diplexer modulare)	
	Gain	dB	40, to 30 dB ± 1 switchable	
	Linearity	dB	± 0,5	
	Slope	dB	0 ... 25, in 1 dB steps adjustment, electronical	
	0-point loss	dB	± 0,5, @ 1 GHz, @ 862 MHz switchable	
	Interstage slope	dB	0...15, electronic adjustment	
	Attenuation	dB	0 ... 20, in 1 dB steps adjustment, electronical	
	Interstage attn., slot UPP1	dB	for JXP-PAD's useable	
	Cablesimulation	dB	0 / 5 / 10 with jumper switchable	
	Testpoint input	dB	-20 ± 1,5 dB, F-connector, internal	
	Testpoint output	dB	-20 ± 0,75 dB, F-connector, internal	
	Return loss In/Out	dB	18dB @ 40MHz -1,5 dB/Octave	
	Noise	dB	typ. 6,5 Tu ≤ 40° C	
	Outputlevel 42 Ch, CENELEC, flat	dBµV	112, CSO > 60 dB	
	Outputlevel 42 Ch, CENELEC, flat	dBµV	112, CTB > 60 dB	
Upstream	Frequency range	MHz	5-105 (to configure with modulare diplexer)	
	Gain passive / active	dB	-4,5 / 26	
	Linearity	dB	± 0,5	
	Slope (Output)	dB	0 ... 10, in 1 dB steps adjustment, electronical	
	Attenuator (Output)	dB	0 ... 20, in 1 dB steps adjustment, electronical	
	Input slot UPP2	dB	for low pass filter LPF 5-85 or JXP-PAD's usage	
	Ingress Detection Switch	dB	0 / 6 / 45, switchable by FOSTRA	
	Slope frequency point	dB	65/85 switchable by jumper	
	Noise	dB	6,5 Tu ≤ 40° C	
	NPR/CNIR @ 50MHz load		50dB @ -46dBmV/Hz input level	
	OUT-BER @ 120 dBµV full load 6 carrier 16 QAM	BER	< $1*10^{-6}$ (KDG 1TS140)	
Power supply		V~	185 - 265 local powered or 28 - 90 V~ remote powered by 10 A feed through	
Power consumption		W	16,3 max. with active return way	
Dimension B x H x T		mm	225 x 180 x 95	
Connectors			PG 11 (delivery without connectors)	

LINE EXTENDER-/ DISTRIBUTION-AMPLIFIER LHD

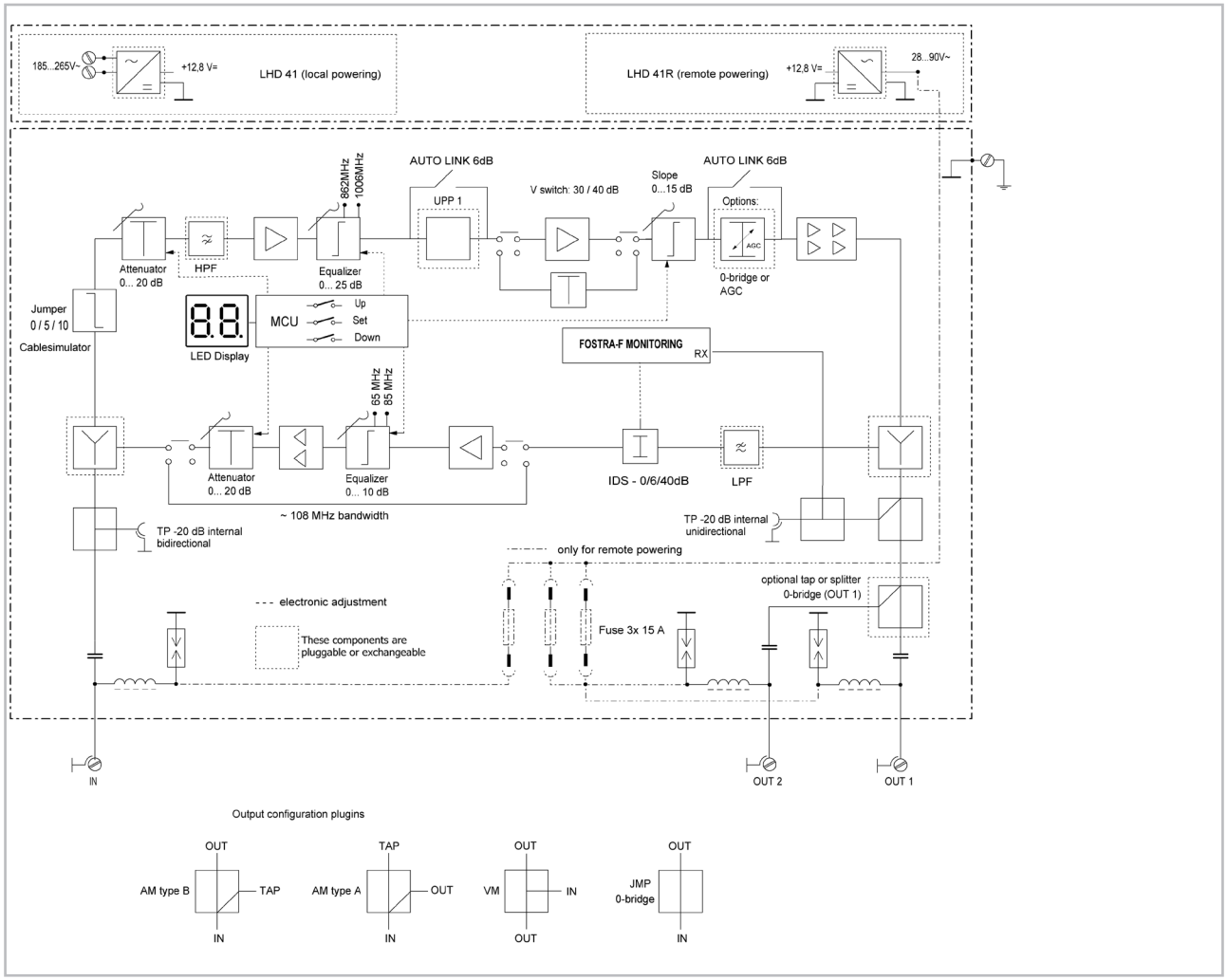

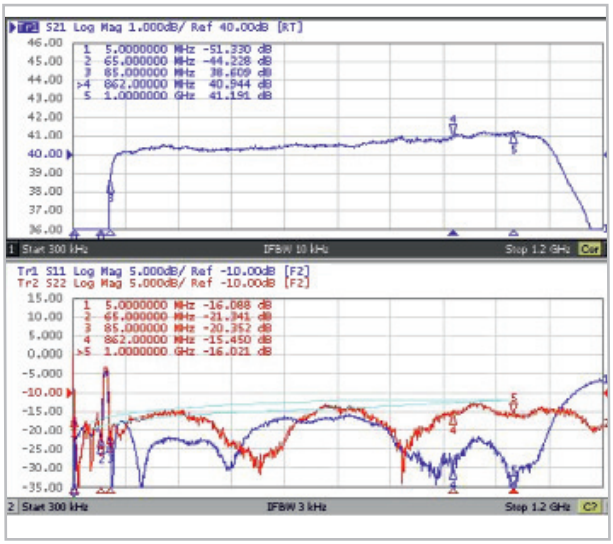

LINE EXTENDER-/ DISTRIBUTION-AMPLIFIER LHD

FOSTRA-F CONNECT NETWORK MANAGEMENT SYSTEM

- Prepared for network management system
- 1 GHz Bandwidth, modulare return way by diplexer
- Interrupt free electronic adjustment, get it operable without additional accessories
- 7-Segment display, simply to adjust by keypad
- Extended up stream bandwidth to 105 MHz to configure by diplexer
- AGC module available
- With **FOSTRA-F**: IDS 0 / 6 / 45 dB switchable at the return
- Optional with **FOSTRA-D** (DOCSIS transponder)
- 2 outputs + line-out, IN/OUT connectors in vert. or horiz. position
- Compact alu-die cast housing acc. IP 65, strand mountable

NEW

- **FOSTRA-D** DOCSIS-Transp.
- **FOSTRA-F** FSK-RX

Type			LHD 41 ED	LHD 41 R-ED
Article-No.			5700 2099 (local powered)	5700 2100 (remote powered)
Downstream	Frequency range	MHz	5-1006 (returnway amplifier 105 MHz fix on board, diplexer modulare)	
	Gain	dB	40, to 30 dB ± 1 switchable	
	Linearity	dB	± 0,75	
	Slope	dB	0 ... 25, in 1 dB steps adjustment, electronical	
	0-point loss	dB	± 0,5, @ 1 GHz, @ 862 MHz switchable	
	Interstage slope	dB	0...15, electronic adjustment	
	Attenuation	dB	0 ... 20, in 1 dB steps adjustment, electronical	
	Interstage attn., slot UPP1	dB	for JXP-PAD's useable	
	Cablesimulation	dB	0 / 5 / 10 with jumper switchable	
	Testpoint input	dB	-20 ± 1,5 dB, F-connector, internal	
	Testpoint output	dB	-20 ± 0,75 dB, F-connector, internal	
	Return loss In/Out	dB	18dB @ 40MHz -1,5 dB/Octave	
	Noise	dB	typ. 6,5 Tu ≤ 40° C	
	Outputlevel 42 Ch, CENELEC, flat	dBµV	114, CSO > 60 dB	
	Outputlevel 42 Ch, CENELEC, flat	dBµV	114, CTB > 60 dB	
Upstream	Frequency range	MHz	5-105 (to configure with modulare diplexer)	
	Gain passive / active	dB	-4,5 / 26	
	Linearity	dB	± 0,5	
	Slope (Output)	dB	0 ... 10, in 1 dB steps adjustment, electronical	
	Attenuator (Output)	dB	0 ... 20, in 1 dB steps adjustment, electronical	
	Input slot UPP2	dB	for low pass filter LPF 5-85 or JXP-PAD's usage	
	Ingress Detection Switch	dB	0 / 6 / 45, switchable by FOSTRA	
	Slope frequency point	dB	65/85 switchable by jumper	
	Noise	dB	6,5 Tu ≤ 40° C	
	NPR/CNIR @ 50MHz load		50dB @ -46dBmV/Hz input level	
	OUT-BER @ 120 dBµV full load 6 carrier 16 QAM	BER	< $1*10^{-6}$ (KDG 1TS140)	
Power supply		V~	185 - 265 local powered or 28 - 90 V~ remote powered by 10 A feed through	
Power consumption		W	17,3 max. with active return way	
Dimension B x H x T		mm	225 x 180 x 95	
Connectors			PG 11 (delivery without connectors)	

LINE EXTENDER-/ DISTRIBUTION-AMPLIFIER LHD

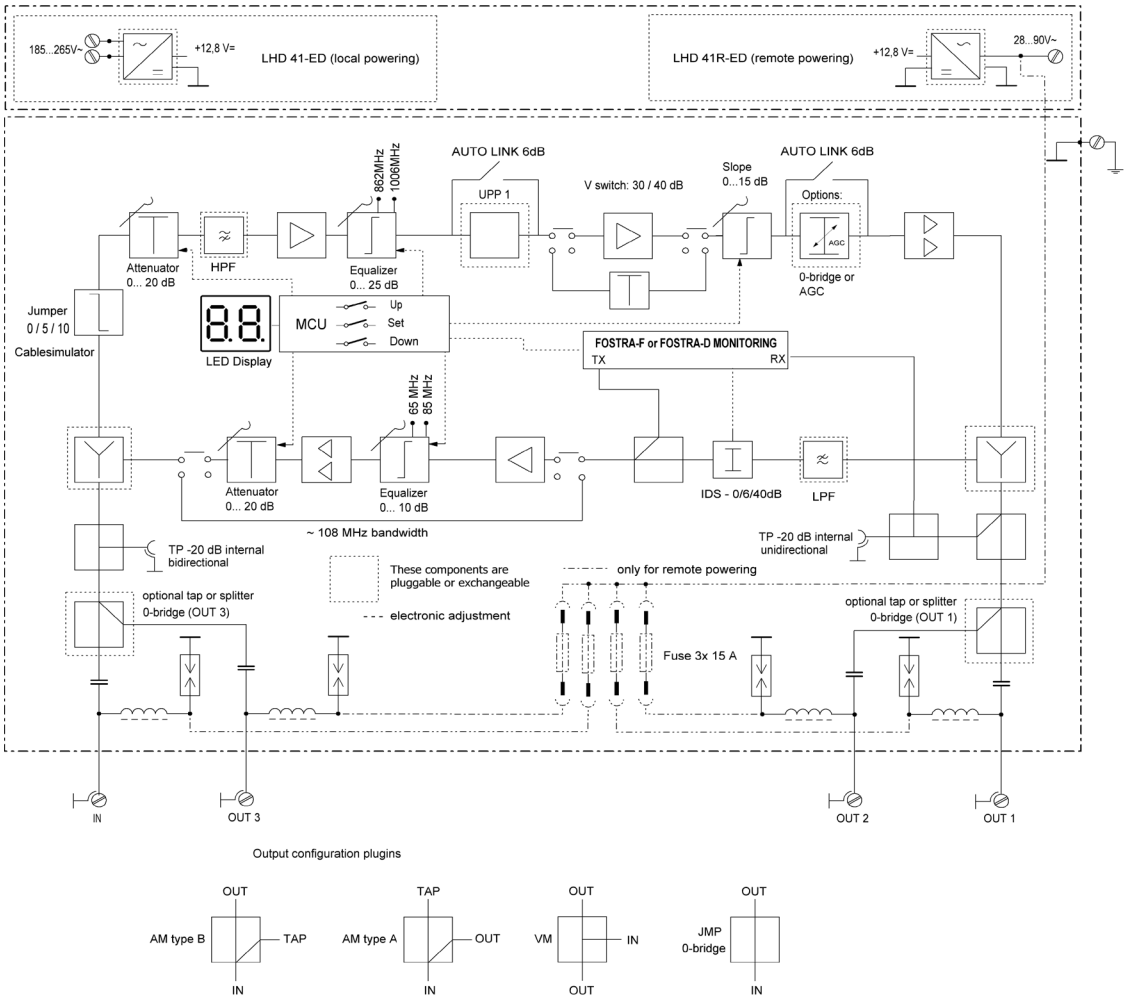

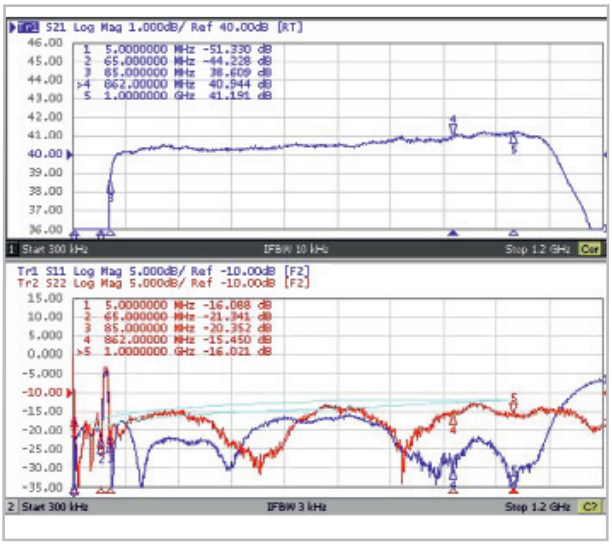

LINE EXTENDER-/ DISTRIBUTION-AMPLIFIER NVD

NEW

- **FOSTRA-D** DOCSIS-Transponder
- **FOSTRA-F** FSK-RX

Key benefits

- Manageable 1GHz trunk and line extender for modern HFC-architectures
- Flexible transponder solution with DOCSIS-transponder **FOSTRA-D** or FSK **FOSTRA-F** microreceiver used to control and monitor with Webbrowser WebGui
- Manageable by DELTANET
- Solid Alu-die cast housing, protection class IP 65
- Built in return amplifier, extended bandwidth to 105 MHz configurable via modulare diplexer
- Ingress-Control-Switch 0 / 6 / 45 dB.
- State of the art GaAs-FET-IC pre-stages and GaAs-FET MMIC final stage for excellent linearity, low noise and high outputlevel
- All adjustments by electronic via keypad and LED-display
- Interstage-slope and attenuation electronic
- For automatic adjustment of temperature induced level variations an AGC module can be used
- Complete equipment and testpoints

Remark: Fittings are not included pls. refer to main catalogue page 140.

FOSTRA-D transponder acc. to DOCSIS-Standard 2.0

The following parameters can be monitored and controlled via the transponder:

- QoS information such like C/N, BER, MHz, HF-level etc.
- Return way Ingress-Control-Switch
- Temperature
- Identification of the amplifier type and place of installation
- Other control and monitoring functions

FOSTRA-F microreceiver for amplifier

Cost-effective monitoring system for amplifier and nodes:

- Monitoring function: Ingress Detection Switch 0 / 6 / 45 dB
- Monitoring status LED indicates the operational modus
- RX frequency 868,3 MHz
- Identification of the amplifier type and place of installation

LINE EXTENDER-/ DISTRIBUTION-AMPLIFIER NVD

- Controlable line- and distribution amplifier for interactive HFC-networks
- Two independent, active high power outputs
- Flexible transponder solution with DOCSIS-transponder **FOSTRA-D** or FSK **FOSTRA-F** microreceiver
- Electronic level and slope adjustment
- Flexible and future proofed returnway with bandwidth extension to 105 MHz, configurable by modular diplexer
- Ingress-Control-Switch 0 / 6 / 45 dB on return way
- Low noise by GaAs-FET-IC pre-amplifier stages
- High output level using Power-Doubler GaAs-FET technology
- AGC ± 3,5 dB - module plug-in
- Power pass of 10 A, with overvoltage protection 6 kV
- Compact alu-die cast housing IP 65

WEB CONNECT NETWORK MANAGEMENT SYSTEM

Type			NVD 9240	NVD 9240 R
	Article-No.		5700 21xx	5700 2101
	Final stage		2 x Power Doubler GaAs-FET	2 x Power Doubler GaAs-FET
Downstream	Frequency range	MHz	5 - 1006	5 - 1006
Downstream	Gain	dB	2 x 41 ± 1	2 x 41 ± 1
Downstream	Noise	dB	typ. 6,5 Tu ≤ 40° C	typ. 6,5 Tu ≤ 40° C
Downstream	Linearity	dB	± 0,5	± 0,7
Downstream	Attenuation input	dB	0 ... 20	0 ... 20
Downstream	Slope 862/1006 MHz	dB	0 ... 20	0 ... 20
Downstream	Interstage slope + attenuation	dB	0 ... 15	0 ... 15
Downstream	Outputlevel max. CSO / CTB > 60 dB, 42 Ch flat	dBµV	2 x 114	2 x 114
Downstream	Return loss	dB	18 dB @ 40 MHz (-1,5 dB/Octave)	
Upstream	Frequency range	MHz	5 - 105	5 - 105
Upstream	Gain	dB	26 ± 1	26 ± 1
Upstream	Noise	dB	7	7
Upstream	Attenuation	dB	0 ... 20	0 ... 20
Upstream	Slope	dB	0 ... 10	0 ... 10
Upstream	Ingress Detection Switch	dB	0 / 6 / 45 with FOSTRA	0 / 6 / 45 with FOSTRA
Upstream	NPR/CNIR @ 50MHz load		50dB @ -46dBmV/Hz input level	50dB @ -46dBmV/Hz input level
Upstream	BER @ 120 dBµV (6 carrier QAM 16; 5,12 Msym/s)	BER	$< 1*10^{-6}$ (KDG 1TS140)	$< 1*10^{-6}$ (KDG 1TS140)
	Power supply	V~	185-265	28-90
	Power pass	A	10	10
	Hum-isolation	dB	> 60	> 60
	Power consumption		31 W (without transp.)	31 W (without transp.)
	Testpoint input		-20 dB (F-connector, internal) bidirectional	
	Testpoint output		-20 dB (F-connector, internal) unidirectional	
	Burst- / Surge protection	kV	6 / 6	6 / 6
	Connector		PG 11 or 5/8"	PG 11 or 5/8"
	Dimension B x H x T	mm	250 x 220 x 100	250 x 220 x 100
	RF-IN/OUT connection		2/2	2/2

LINE EXTENDER-/ DISTRIBUTION-AMPLIFIER NVD

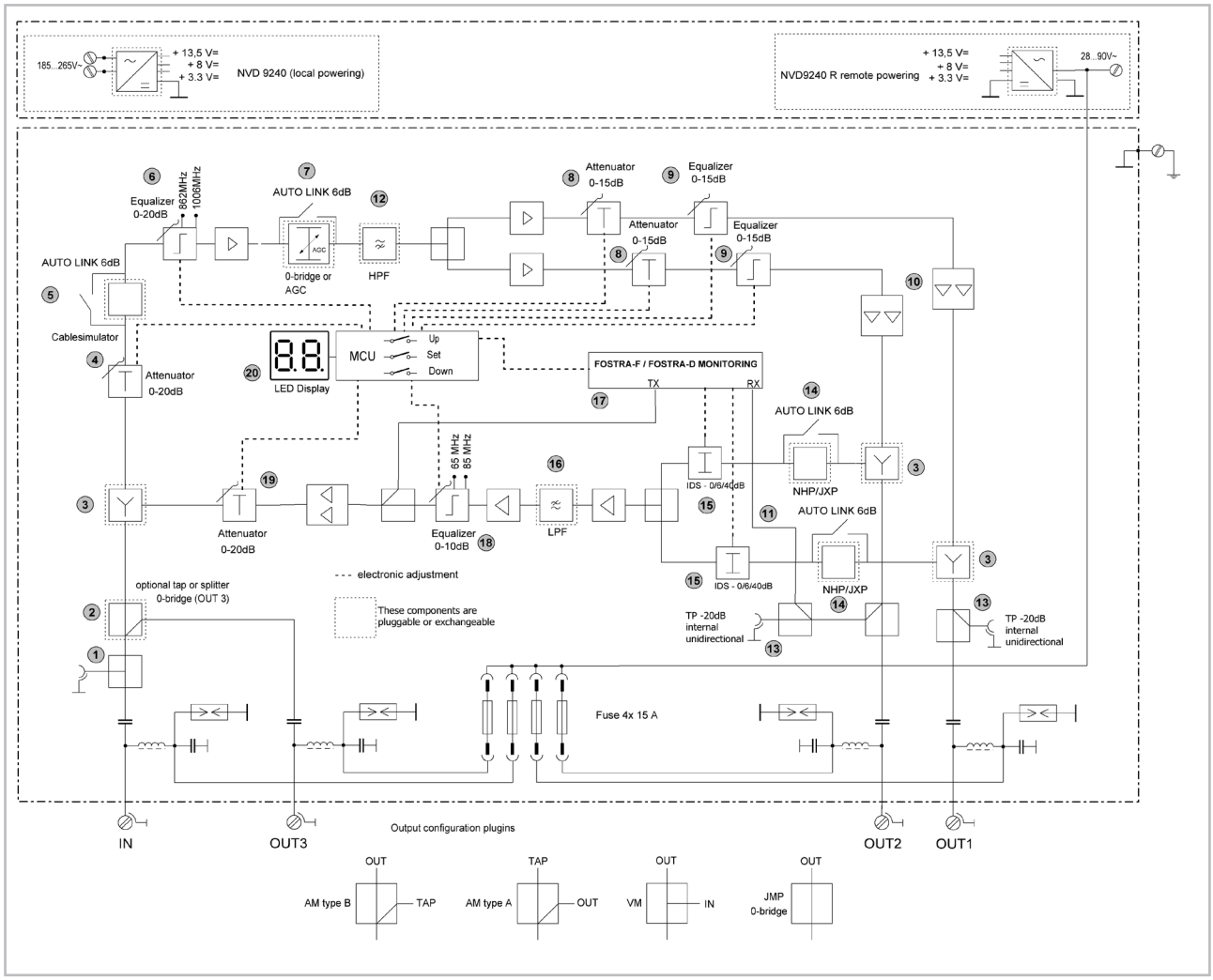

1. Testpoint - 20 dB, F-connector internal, bi-direktional
2. Plug-in for splitter type VM 302 or tap type AM 301 (page18), Line-Out
3. Plug-in for diplexer 65/85 MHz type: RLK 565, RLK 585 (page 19)
4. Electronic level attenuator 0...20 dB 0,5 dB step wide
5. Plug-in for cable simulator, JXP
6. Electronic slope attenuator 862/1006 MHz, 0...20 dB, 0,5 dB step wide
7. Plug-in for AGC-module, type AGC 303 (page 16) for automatic adjustment
8. Electronic interstage level attenuator 0...15 dB 0,5 dB step wide
9. Electronic interstage slope attn. 1006 MHz 0...15 dB, 1dB step wide
10. GaAs-FET Power-Doubler IC
11. Transponder RX
12. Highpassfilter HPF 85-1, HPF 105-1
13. Testpoint -20dB unidirectional, internal
14. JXP plug-in: level adjustment
15. Return way Ingress-Detection-Switch, 0 / 6 / 45 dB
16. Lowpassfilter LPF 5-65, LPF 5-85
17. **FOSTRA-D** or FSK **FOSTRA-F**
18. Electronic slope atten. 65/85 MHz, 0...10 dB, 1dB step wide
19. Electronic level attenuator 0...20 dB, 1dB step wide
20. MCU + display and keypad

HOUSE-AMPLIFIER PROFI-LINE BKD-S

- Prepared for **FOSTRA-F** network monitoring
- 1 GHz bandwidth, modular return way (page 17)
- Unique Step Spin technology - Step Spin adjust - allows readable values and fast adjust
- No accessories necessary for operation
- Low noise by GaAs-FET IC's
- Modular power supply allows an easy in field replacement or up grade - less service interruption, no new adjustment needed
- With **FOSTRA-F**: IDS 0 / 6 / 45 dB on return switchable (option)

BKD xx S:

- Push-Pull amplifer with high outputlevel (BKD 40S)
- MultiGainTech: gain switchable

Type		BKD 40 SF	BKD 35 SF	BKD 30 SF
Article-No.		5700 1868	5700 1867	5700 2160
Frequency range		5-1006	5 - 1006	5 - 1006
Plug-in slot		1	1	1
Gain	dB	34/40 ± 1 switchable	29/35 ± 1 switchable	25/31 ± 1 switchable
Noise[1]	dB	6	7,5	7,5
Linearity[1]	dB	± 0,7	± 0,7	± 0,7
Slope Step Spin		Step Spin 0...10 dB / + 10dB 2 dB step wide		
Attenuation Step Spin		Step Spin 0...10 dB / + 5dB 2 dB step wide		
Interstage-slope		0/7 dB switchable	0/7 dB switchable	0/7 dB switchable
Interstage attenuation		0/6 dB switchable	0/6 dB switchable	0/6 dB switchable
Cable equivalent		5/10 dB switchable	5/10 dB switchable	5/10 dB switchable
Outputlevel[1]				
CSO / CTB > 60 dB, 42 Ch flat	dBµV	109 / 109	103 / 103	100 / 103
95 K Unity Media grid 7dB slope	dBµV	110	104	101
Power supply	V~	185-265	185-265	230
Power consumption[1]	W	8,3	5,1	3,6
Testpoint IN		- 20 dB (F-Connector)	- 20 dB (F-Connector)	- 20 dB (F-Connector)
Testpoint OUT		- 20 dB (F-Connector)	- 20 dB (F-Connector)	- 20 dB (F-Connector)
Burstprotection	kV	2,0	2,0	2,0
Connector		F-Connector	F-Connector	F-Connector
Dimension B x H x T	mm	188 x 85 x 50	188 x 85 x 50	170 x 85 x 50
Weight	kg	1,1	1,1	1,2

[1] without returnway module

BKD 40 SF

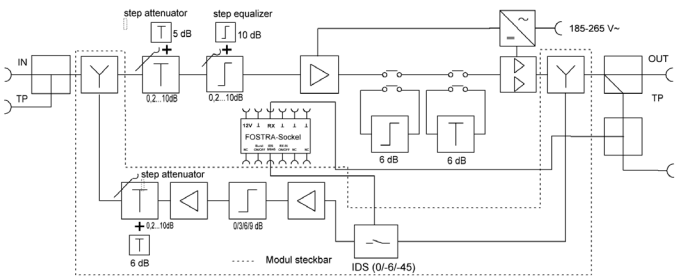

OVERALL VIEW AMPLIFIER/NODE- PLUG-INS

- In the overview, hereafter the plug-in modules for the following products are available from model year 2013:
- Nodes: ONH, ONB
- Amplifier: BKD-S, LHD, NVD
- Please also see notes in the main catalog

Types ONH, ONB, LHD, NVD (for latest generation from 2013 on)

Type		RLK 565	RLK 585	AGC 303	NHP 15J	RV 65-32 EF	FOSTRA-F	FOSTRA-D
Part-No.		5700 2096	5700 2096	57002091	5700 2116	57001981	57001981	57001980
Description		Diplexer	Diplexer	AGC	Ingress-Filter	RW-module	FSK-Tr.	DOCSIS-Tr.
Frequency range	MHz	5-65/85-1006	5-85/105-1006	5-1006	15-65	868	868	QAM - Ch
Gain	dB			+- 3		32		
Loss	dB	1,0	1,0	< 5	<1,5/>40			
Slope	dB					3/6/9		
ONH 11xx							■	
ONB 11xx		■	■				■	
BKD-SF						■	■	
LHD 41		■	■	■	■		■	■
NVD 9240		■	■	■	■		■	■

Type		VM 302	AM 301-10A	AM 301-20A	AM 301-10B	AM 201-20B
Part-No.		5700 2092	5700 2093	5700 2094	5700 2117	5700 2118
Description		splitter	tap	tap	tap	tap
Frequency range	MHz	5-1006	5-1006	5-1006	5-1006	5-1006
Loss	dB	4,5	1,3 / 10,0	0,9 / 20,0	1,3 / 10,0	0,9 / 20,0
Type			Tap out	Tap out	Line out	Line out
NVD 9240		■	■	■	■	■
LHD 41		■	■	■	■	■

PLUG-IN MODULES FOR HOUSE-AMPLIFIER

- For BKD-S amplifier
- IDS - Ingress Detection Switch (RV 65-32EF)
- Step Spin adjustment, readbale values
- High outputlevel
- Very good linearity

Type		RV 65-32 E3	RV 65-32 EF
Part-No.		5700 1955	5700 1956
			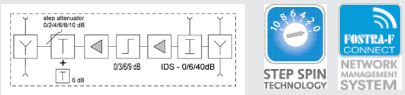
Frequency range	MHz	5-65	5-65
Gain	dB	32	32
Attenuation	dB	0,2,4...16 dB	0,2,4...16 dB
Slope	dB	0/3/6/9	0/3/6/9
Linearity	dB	± 0,5	± 0,5
Noise	dB	7	7
Ingress Detection Switch	dB	-	0 / 6 / 45
KBW mid channel load	dBµV	115	115
4 carrier QAM 64	BER	$< 1*10^{-8}$	$< 1*10^{-8}$
Downstream	MHz	85-1006	85-1006
Loss	dB	- 1,0	- 1,0
Power consumption	W	1,6	1,7

PLUG-IN MODULES FOR TRUNK- AND DISTRIBUTION-AMPLIFIER

- Diplex-Module
- For LHD 41 and NVD 9240
- High return loss of 18 dB @ 47 MHz, -1,5 dB per octave
- Plastic cover for solid protection
- Remark: 2 pieces per amplifier needed

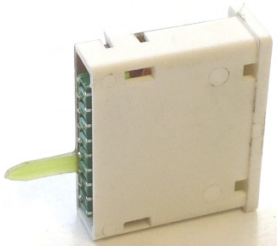

Type		RLK 565	RLK 585
Part-No.		57002095	5700 2096
Useage		LHD 41 / NVD 9240	LHD 41 / NVD 9240
Frequency range upstream	MHz	5-65	5-85
Frequency range downstream	MHz	85-1006	105-1006
Loss	dB	1,0	1,0
Isolation Up-/Downstream	dB	> 50 per Diplexer	> 50 per Diplexer

HFC Network Segmentation 2 x 2, managed by DELTANET

- Monitoring and Configuration
- GIS oriented map views
- WEB-access: Any time, any place, any device

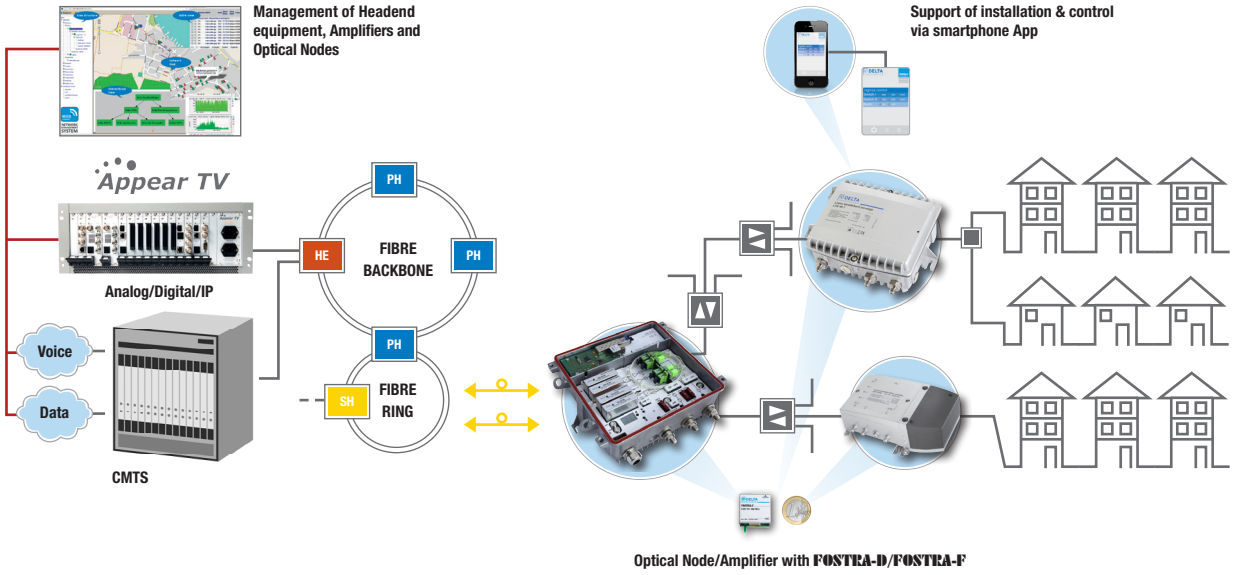

FTTx-, HFC- and RFoG-Applications

- Different wavelength for upstream transmission (1290,1310...1610nm)
- Solution for 1 fibre- and 2 fibre-system available
- SCTE-174 compliant
- Optical budget 28 dB (RFoG)
- Open Access over Passive Optical Network (PON)
- Coexistence with G-PON

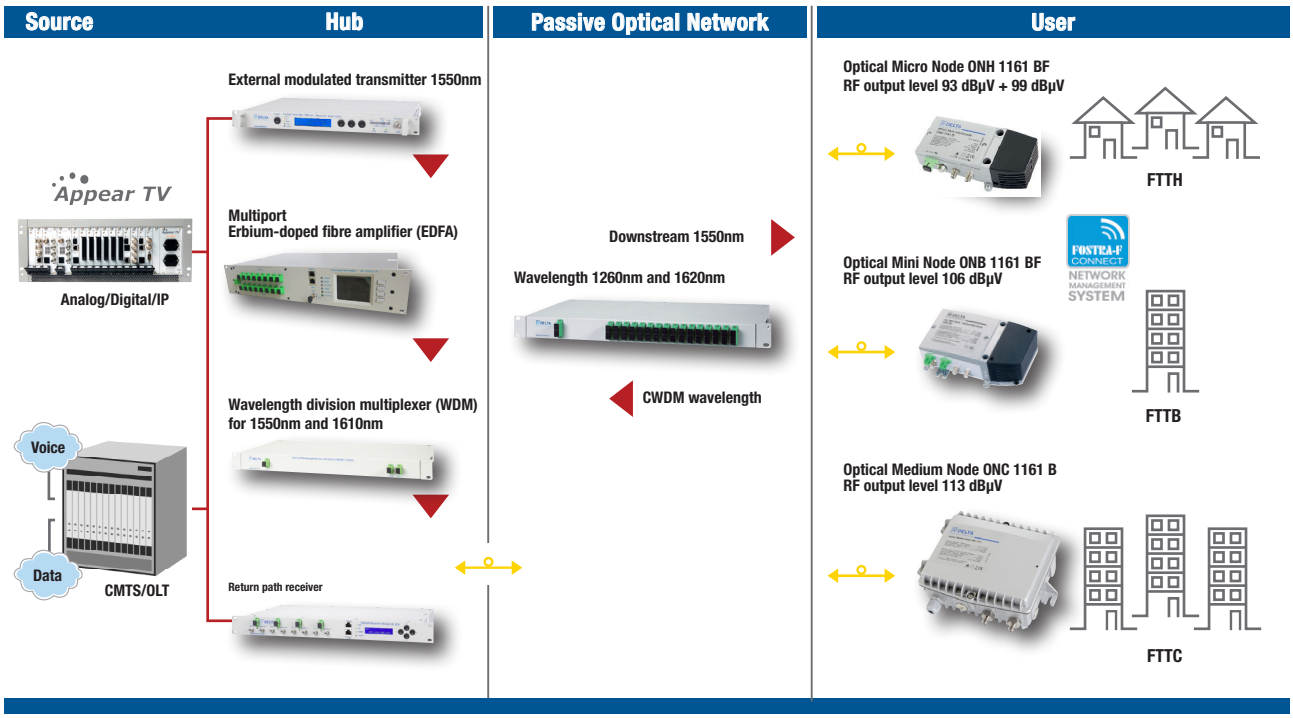

Germany
DCT DELTA GmbH
Bodanrückstraße 1
D-78351 Bodman
Tel. +49 7773 929258
Fax +49 7773 929259
info@dct-delta.de
www.dct-delta.de

Austria
DELTA Solution Multimedia Handels GmbH
Im Kirchholz 10 b
A-6845 Hohenems
Tel. +43 5522 4343020
Fax +43 5576 73028
office@delta-s.eu
www.delta-s.eu

Swiss
DELTA Swiss AG
Industriezone Schächenwald
CH-6460 Altdorf
Tel. +41 4161 91400
Fax +41 4161 91409
info@delta-swiss.ch
www.delta-swiss.ch

70000147