AC2000 G UNIVERSAL AMPLIFIER

The AC2000 G is a dual active output amplifier with 2 x 40 dB of gain. The input and output amplifier stages are both based on high performance GaAs solutions, that makes the used gain range especially wide. The amplifier can be used in distribution purposes by having 2 high gain and high level outputs. An other way of using this product is to have a lower level trunk output with ALSC function and 1 or 2 high level bridger outputs.

All essential return path elements like ingress switches are fixed built on the mother board but for example return amplifier module can be chosen after the needed performance.

Features

- 1 GHz bandwidth
- Remote power supply with PFC
- All amplifiers stages use GaAs technology
- 1…3 outputs by internal splitting
- Plug-in module adjustments
- Excellent ESD and surge protection
- Optional high performance return amplifier
- Fixed station memory for electrical identification
- Electrical gain & slope control modules available
- With AC6951 transponder module:
  - CATVisor or HMS compatible transponder with wide frequency ranges
  - ALSC with fully user programmable pilots
  - Downstream spectrum analyser
  - Upstream signal quality monitoring

Technical specifications

Parameter	Specification	Note
Downstream signal path (values with diplex filters)		
Frequency range	47 / 54 / 70 / 85 / 108...1006 MHz	
Return loss	20 dB	1)
Gain	2 x 30…40 dB	2)
Input attenuator control range	20 dB	3)
Input equaliser control range	25 dB	3)
Mid-stage slope	8 dB	4)
Flatness	± 0.4 dB	5)
Group delay	2 ns	6)
Test point	-20 dB	7)
Transponder connection	- 19 dB	8)
Input by-pass attenuation	- 2 dB	
Noise figure	5.4 dB	9)
$U_{max(112\ QAM\ channels)}$	108.5 dBuV	10)
CTB 42 channels	114.0 dBµV	11)
CSO 42 channels	116.0 dBµV	11)
XMOD 42 channels	112.5 dBµV	11)
CTB 110 / 77 channels	71.0 / 81.0 dBc	12)
CSO 110 / 77 channels	70.0 / 79.0 dBc	12)
XMOD 110 / 77 channels	67.0 / 74.0 dBc	12)
Upstream signal path (values with diplex filters)		
Frequency range	5...30 / 42 / 50 / 65 / 85 MHz	
Return loss	18 dB	13)
Gain	2 x 18.0 / - 8.5 dB	14)
Ingress switching	0 / - 6 / < - 50 dB	
Gain control range	20 dB	15)
Equaliser control range	7 dB	16)
Flatness	± 0.5 dB	17)
Transponder connection	- 26 dB	18)
Noise figure	10.0 dB	19)
Output level, DIN 45004B	113.0 dBµV	19)
CINR	> 62 dBc	20)
General		
Power consumption (65 / 230 V_{AC})	25.5 / 27.5 W	21)
Supply voltage	27...65 Vac , ±33...90Vdc / 205…255 Vac	
Maximum current feed through	8.0 A / port	22)
Hum modulation	70 dB	22)
Resistance for remote current	25 mΩ / port	
Input / Output connectors	PG11	
Test point connectors	F- female	
Dimensions	245 x 255 x 100 mm	h x w x d
Weight	3.0 kg	
Operating temperature	-40...+55 °C	
Class of enclosure	IP67	23)
EMC	EN50083-2	
ESD	4 kV	24)
Surge	6 kV	25)

Notes

1) The limiting curve is defined at 40 MHz -1.5 dB / octave.

2) Guaranteed maximum gain is always 2 x 39 dB. With mid-stage gain control possibility the outputs can be used in low gain mode. Gain is defined with mid-stage equaliser and diplex filters. All other used plug modules are 0 db jumpers.

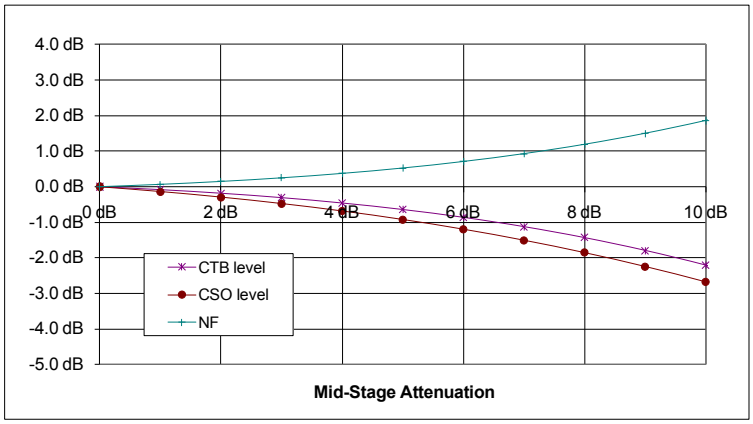

The picture shows how the NF and distortion performance is changing if mid-stage gain control is used. Valid with 8 dB sloped CENELEC 42 chs loading.

3) Fixed value attenuators and equalisers are available.

4) The amplifier is defined with 8 dB tilted output between 47…1006 MHz.

5) Typical value. The guaranteed value is ± 0.75 dB. Flatness is defined with mid-stage equaliser and 2 pcs of diplex filters. All other used plug modules are 0 dB jumpers. Spec is valid 2 MHz after the starting frequency of the selected diplex filter.

6) Typical value for 4.43 MHz band. Measured at channel S2. At higher frequencies the specification is better.

7) Output TP has a tolerance of ± 0.75 dB between 47…862 MHz and ± 1.0 dB between 862…1006 MHz. This connection can be used also as an injection point for a test signal of return channel.
Input TP is a transformer type and it is having an accuracy of ± 1.5. It can be used as the output test point for the return signal.

8) This is the level difference between output 1and transponder connection pin on the motherboard.

9) Typical value at 862 MHz with the maximum gain. The guaranteed worst case value is 1.0 dB worse. Defined in conditions described in NOTE 2.

10) Typical value according to IEC60728-3-1. Channels have 10 dB cable equivalent slope between 110…1006 MHz and signal level has been defined at 1002 MHz. BER measurement has been done on the worst channel between 110…862 MHz.

11) EN50083-3. Amplifier output was 8 dB cable equivalent sloped. All results are typical values in room temperature, which can be used in system calculations. XMOD is measured at the lowest channel.
The highest recommended output level for the amplifier is 113.0 dBuV with 42 channels.

12) Measured with 77 and 110 NTSC channels. Amplifier output was 12 dB linearly sloped and the used levels were at 55 / 550 / 750 / 862 MHz 35.0 / 42.5 / 45.5 / 47.0 dBmV. All results are typical values in room temperature, which can be used in system calculations. XMOD is measured at 55.25 MHz.
The highest recommended output level for the amplifier is 51 dBmV with 110 channels and 53 dBmV with 77 channels

13) Valid over the band 7…85 MHz.

14) Active (AC6144)/ passive (AC6140) return module.

15) There are plug-in positions at the input and output of the upstream channel. Both positions are using the attenuators of JDA9xx series.
The attenuator at the return input is always selected by default in factory to be JDA900. When

the station is working as a node, the equipment is automatically delivered with the plug-in low pass filter of correct frequency.
The wanted output attenuator plug has to be defined in the ordering code.

16) The pivot point is at 65 MHz. In 30 MHz operation the control range is 3.5 lower. This means that the reached maximum gain in 30 MHz operation is 3.5 dB lower if maximum slope is used

17) Valid with active return module AC6144.

18) This is the theoretical level difference between the input connector of the return signal path and the injection pin of the up-stream signal of the transponder. It can be used when adjusting the transmitter of the modem. The input attenuator of the return path is 0 dB.

19) Typical values , which can be used in network design. Valid with the active module AC6144.

20)

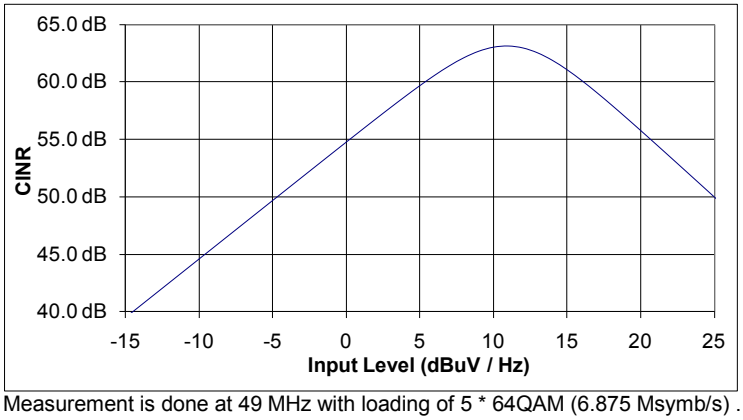

Measurement is done at 49 MHz with loading of 5 * 64QAM (6.875 Msymb/s) .

21) With passive return path. With active return path and transponder the value is 4.5 W higher.

22) At any frequency from 10 to 862 MHz when the remote current is less than 8 A. 12 A is the maximum total current which can be locally injected into all ports simultaneously.

23) The housing is tested to be class IP67. However, in standard delivery conditions the lowest side wall is equipped with a ventilation hole of 1 mm. Then the practical enclosure class is IP54.

24) EN61000-4-2, contact discharge to enclosure and RF-ports.

25) EN61000-4-5, 1.2 / 50 µs pulse to RF-ports.

Compatibility

All accessories that will be used together with this product, should use the newest generation available. By using only up-to-date accessories a proper operation can be ensured.

Monitoring functions with AC6911 or AC6951 transponder

- Status LEDs for alarm and modem status indication
- CATVisor and HMS compatible remote connection for monitoring and control
- Electrical downstream gain / slope module control
- Return path ingress switch ON / -6 dB / OFF control
- 65 VAC voltage measurement with alarms
- Local +12 V and +24 V voltage measurements with alarms
- Internal temperature measurement with alarms
- Lid status monitoring with alarm
- Service terminal connection monitoring with alarm
- Configuration change monitoring with alarm
- Modem receive and transmit signal level monitoring with alarms
- Fully user configurable alarm limits, severities, enabling and delays
- Configuration data and user notes stored in motherboard memory
- Uptime, total uptime and reset counters for power outage statistics
- Alarm log stored into non-volatile memory for easy troubleshooting
- Fast local softwate update via USB also without power supply
- Remote software update to multiple units simultaneously

Additional features available with AC6951 transponder:

- Interstage gain and slope control by ALSC mode with saturation alarm
- ALSC pilot frequencies, detector types, backoffs and decision levels are user programmable
- Automatic reserve pilot switching and ALSC operation with only one pilot
- User configurable all pilots lost behaviour
- Spectrum analyser for downstream level measurement with alarm
- Ingress analyser for upstream level measurement with alarms

Block Diagram

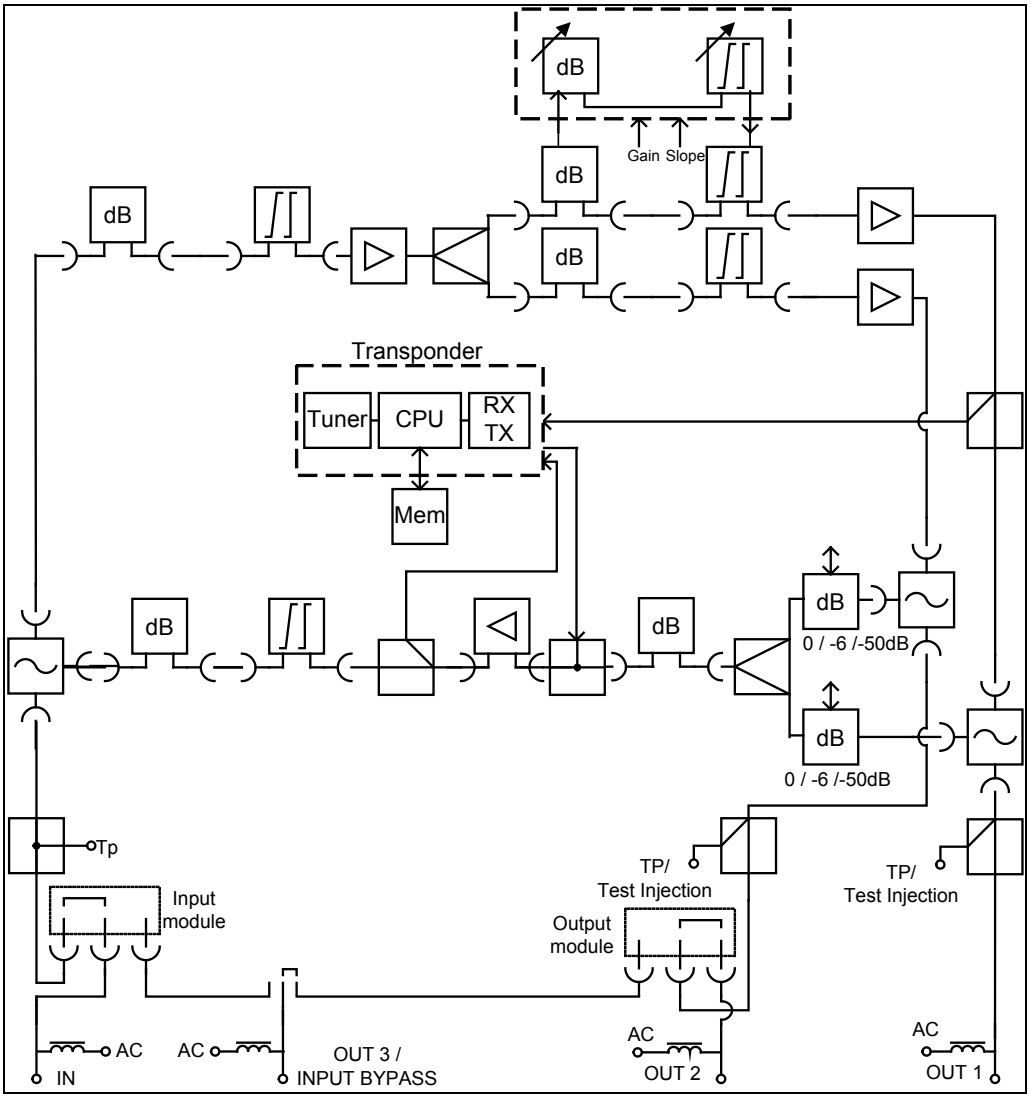

Ordering Information

AC2000 configuration map

	1-					2-				3-		4-			5-			6-		7-		8-		9-		
	1	2	3	4		1	2	3		1		1	2		1	2		1		1		1		1	2	
AC2000					-				-		-			-			-		-		-		-			

1-1 Input connection (first from left)
- **A** PG11
- **B** 5/8"
- **C** IEC
- **D** 3.5/12
- **E** F

1-2 Input by-pass/output 3 connection
- **A** PG11
- **B** 5/8"
- **C** IEC
- **D** 3.5/12
- **E** F
- **X** None (PG11 sealing plug)

1-3 Output 2 connection
- **A** PG11
- **B** 5/8"
- **C** IEC
- **D** 3.5/12
- **E** F

1-4 Output 1 connection (first from right)
- **A** PG11
- **B** 5/8"
- **C** IEC
- **D** 3.5/12
- **E** F

2-1 Input module
- **A** 0 dB, no by-pass (AC6110)
- **B** Splitter -3.7 dB, by-pass in use (AC6124)
- **C** Tap -8 dB, by-pass in use (AC6128)
- **D** Tap -12 dB, by-pass in use (AC6112)
- **X** None

2-2 Diplexer filters
- **A** 30/47 MHz (3 x CXF030)
- **B** 42/54 MHz (3 x CXF042)
- **C** 50/70 MHz (3 x CXF050)
- **D** 65/85 MHz (3 x CXF065)
- **K** Forward path jumper (3 x CXF000)
- **M** 85/108 MHz (2 x CXF085)
- **X** None

2-3 Input attenuator and equaliser
- **A** 2 x 0 dB plugs (JDA900 and TXA000)
- **B** Manual gain and slope adjustment (AC6171)
- **X** None

3-1 Future option
- **X** None

4-1 Interstage slope and gain adjustment
- **A** 2 x 8 dB slope @ 862 MHz (2 x TDE810) and no gain adjustment plugs
- **B** 2 x 8 dB slope @ 862 MHz (2 x TDE810) and full gain (2 x JDA900)
- **C** 2 x 8 dB slope @ 862 MHz, temp. comp. (2 x TTE810) and no gain adj. plugs
- **D** 2 x Flat response (2 x TXA000) and full gain (2 x JDA900)
- **E** 2 x 8 dB slope @ 862 MHz (2 x TDE812 DK) and no gain adjustment plugs
- **K** Out 1 electrical gain & slope (AC6170), out 2 TDE810 and JDA900
- **R** 2 x 8 dB slope @ 1006 MHz (2 x TGE010) and no gain adjustment plugs
- **S** Out 1 electrical gain & slope (AC6170), out 2 TXA000 and JDA902
- **X** None

4-2 Output module for output 2
- **A** 0 dB, 2 outputs in use (AC6120)
- **B** Splitter -3.7 dB, 3 outputs in use (AC6124)
- **C** Tap -8 dB, 3 outputs in use (AC6128)
- **D** Tap -12 dB, 3 outputs in use (AC6112)
- **X** None

5-1 Return path input module
- **A** 0 dB plug (JDA900)
- **B** HPF 15 MHz, ingress blocker (AC6223)
- **X** None

5-2 Return path unit
- **A** Active return 21 dB (AC6144) without att. and equal.
- **B** Active return 21 dB (AC6144) with 0 dB att. and equal. (2 x JDA900)
- **E** Passive return (AC6140) without att. and equal.
- **F** Passive return (AC6140) with 0 dB att. and equal. (2 x JDA900)
- **I** Active return 30 dB with gain and slope adjustment (AC 6136)
- **X** None

6-1 Future option
- **X** None

7-1 Future option
- **X** None

8-1 Element management transponder
- **K** Standard, CATVisor (AC6952)
- **L** Standard, HMS (AC6952 HMS)
- **X** None

9-1 Power supply
- **A** Local powering, euro plug (230 VAC)
- **B** Remote powering with cable clamp (65 VAC)
- **C** Local powering, UK plug (230 VAC)

9-2 Gain and housing
- **G** 40 dB, 1 GHz platform, painted housing

DOC0010767, Rev043